Drawings

Model PK200
Current-to-Pneumatic Converter

Unit: mm
(Approx. inch)

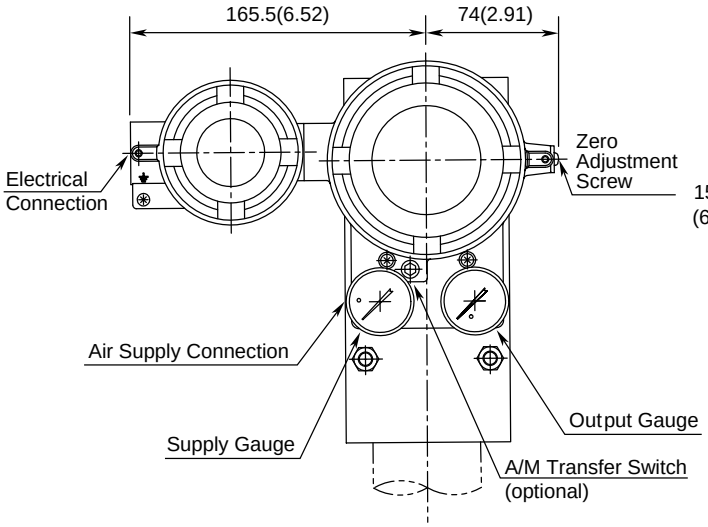

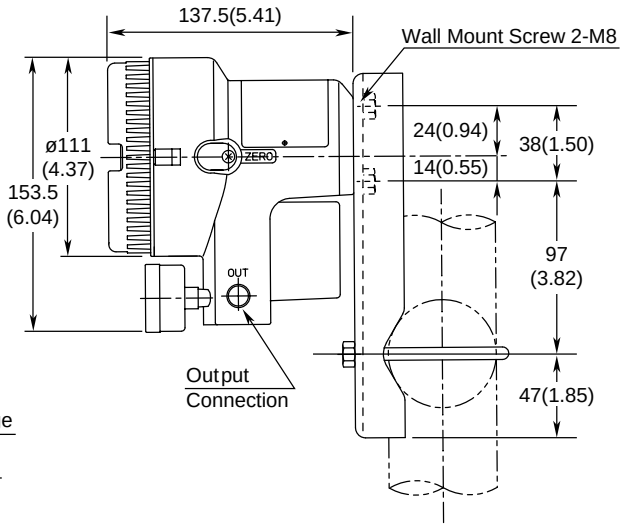

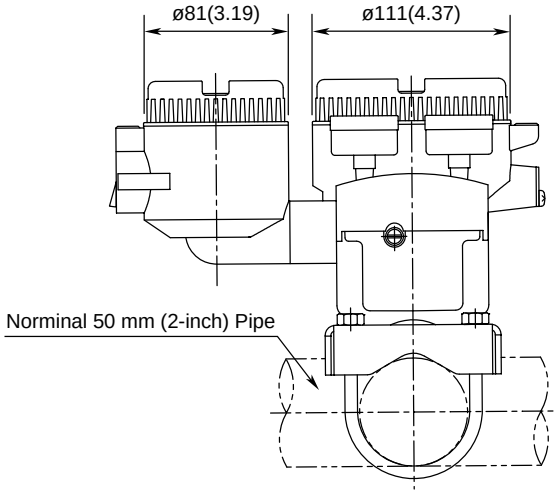

● Terminal Configulation

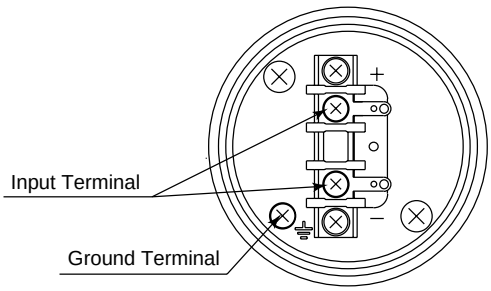

All Rights Reserved, Copyright © 1992, Yokogawa Electric Corporation.
Subject to change without notice. Printed in Japan.

SD 21B03D01-01E
7th Edition: July 5, 2001