General Specifications

FCN-RTU Low Power Autonomous Controller Hardware

GS 34P02Q13-01E

■ GENERAL

This document describes the general specifications of the FCN-RTU low power autonomous controller with NFCP050 CPU module.

For functions, refer to “FCN-RTU Low Power Autonomous Controller Functions” (GS 34P02Q02-01E).

■ FEATURES

- High performance and low power consumption modular controller
- Memory with ECC.
- FCN-RTU can be used wide temperature range and high altitude place.
- Analog and digital I/Os adequate for gas/oil wellhead control built in CPU module
- Four serial ports for plural communications built in CPU module
- Up to eight additional I/O modules (with NFBU200)
- Wide voltage range (10 to 30 V DC input) power supply module (NFPW426)
- Power supply module can be duplexed (NFBU200 with NFPW444)
- Low heat dissipation eliminates the need for a fan
- A wealth of RAS features — CPU self-diagnostics, temperature monitoring, I/O diagnostics, and more
- Additional I/O modules (except CPU embedded I/Os) hot-swappable

Short type (NFBU050)

Long type (NFBU200)

F01cE.ai

■ CONFIGURATION

FCN-RTU consists of the following modules:

- Base module (NFBU050,NFBU200)
- Power supply module (NFPW426,NFPW444)
- CPU (with built-in I/Os) module (NFCP050)
- Additional I/O modules (up to eight modules can be mounted on a base module)

There are two types of base module.
Short type : Configuration with a NFBU050 base module (short)
Long type : Configuration with a NFBU200 base module (long)
The following table shows a list of the functions of each configuration.

Table FCN-RTU Control Function List

Base module	CPU Module	Power supply module	Power supply Redundancy	Max number of mountable I/O modules (*3)
NFBU050 base module (short)	NFCP050	NFPW426,NFPW444	N.A.	3 (*1)
NFBU200 base module (long)		NFPW444	✓	8 (*2)

*1: Two from the five slots are exclusive for one CPU module.
*2: Two from the ten slots are exclusive for one CPU module.
*3: Available modules are limited. Please refer to “■ I/O AND RELATED MODULES”.

Yokogawa Electric Corporation
2-9-32, Nakacho, Musashino-shi, Tokyo, 180-8750 Japan
GS 34P02Q13-01E
©Copyright Dec. 2008(YK)
31st Edition Aug. 15, 2023(YK)

- **Examples of Configuration**

Short type (NFBU050)

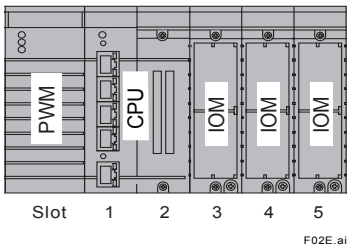

Long type (NFBU200)

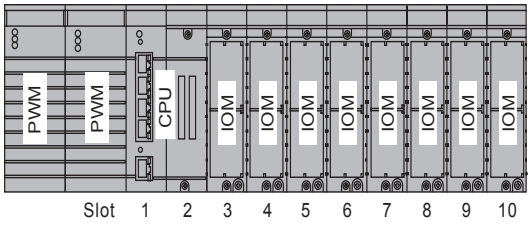

Abbreviation	Description
PWM	Power supply module
CPU	CPU module (with built-in I/Os)
IOM	Additional I/O module

■ POWER CONSUMPTION

Table Power Consumption of FCN-RTU (Minimum Consumption Configurations)

		NETWORK (Ethernet)	
		not used	used
SERIAL+ DI/O+AI/O (built-in I/Os: DI, DO, AI, AO, PI)	not used	1.6 W	2.3 W
	used	2.1 W	2.9 W

Note: When FCN-RTU is composed of NFCP050, NFBU050 and NFPW426 (Without additional I/O modules and analog field power supply for built-in AO).

■ INSTALLATION REQUIREMENTS

Item	Specification	
Ambient temperature	Operation	-40 to +70 °C (*1)
	Transportation	-40 to +85 °C
Ambient humidity	Operation	5 to 95 %RH (no condensation)
	Transportation	5 to 95 %RH (no condensation)
Ambient temperature fluctuation	Operation	Within ±10 °C/h
	Transportation	Within ±20 °C/h
Dust		0.3 mg/m^3 or less
Protection class		IP20
Resistance to corrosive gases		ANSI/ISA S71.04 Class G2 (Standard) (ANSI/ISA S71.04 Class G3, option)
Resistance to vibration		0.15mm P-P (5 to 58 Hz)
		1 G (58 to 150 Hz)
Resistance to shock		15 G, 11 ms (during power-off, for sine half-waves in XYZ-directions)
Altitude		3000 m or less (*1)
Noise	Electric field	3 V/m or less (26 MHz to 1 GHz)
	Magnetic field	30 A/m (AC) or less, 400 A/m (DC) or less
	Electrostatic discharge	4 kV or less contact discharge, 8 kV or less aerial discharge
Grounding		Apply the grounding system which is defined by the rules and standards of the country or the region.
Cooling		Natural air cooling

*1: It depends on additional I/O modules. Refer to "■ I/O AND RELATED MODULES" for details.

All Rights Reserved. Copyright © 2008, Yokogawa Electric Corporation

■ COMPLIANT STANDARDS

Item		Standards
Safety Standards (*1) (*11)	CSA	CAN/CSA-C22.2 No.61010-1 CAN/CSA-C22.2 No.61010-2-201 CAN/CSA-C22.2 No.61010-2-030
	CE Marking Low Voltage Directive	EN 61010-1 EN IEC 61010-2-201 EN IEC 61010-2-030
	UKCA Marking Safety Regulation	EN 61010-1 EN IEC 61010-2-201 EN IEC 61010-2-030
	EAC Marking	CU TR 004
	Morocco Compliance Marking (Cم Marking)	NM EN 61010 1 NM EN 61010 2 201 NM EN 61010 2 030
EMC Standards	CE Marking EMC Directive	EN 55011 Class A Group 1 (*9) EN 61000-6-2 (*1) (*2) (*3)
	UKCA Marking EMC Regulation	EN 55011 Class A Group 1 (*9) EN 61000-6-2 (*1) (*2) (*3)
	RCM	EN 55011 Class A Group 1 (*9)
	KC Marking	Korea Electromagnetic Conformity Standard
	EAC Marking	CU TR 020
	Morocco Compliance Marking (Cم Marking)	NM EN 55011 Class A Group 1 (*7) NM EN 61000 6 2 NM EN 61000 3 2 NM EN 61000 3 3
Standards for Hazardous Location Equipment (*4) (*5)	US (FM) Nonincendive (*1)	Class I Division 2, Groups A, B, C, D T4 FM 3600:2018 FM 3611:2018 FM 3810:2018 ANSI/UL 121201:2017 ANSI/UL 61010-1:2012 ANSI/UL 61010-2-30:2012 ANSI/UL 61010-2-201:2014
	ATEX Ex “ec” (*6) (*7)	Ex II 3 G Ex ec nC II C T4 Gc X (*10) EN IEC 60079-0:2018 EN IEC 60079-7:2015 + A1:2018 EN 60079-15:2010 EN IEC 60079-15:2019
	UKEX Ex “ec” (*6) (*7)	Ex II 3 G Ex ec nC II C T4 Gc X (*10) EN IEC 60079-0:2018 EN IEC 60079-7:2015 + A1:2018 EN 60079-15:2010 EN IEC 60079-15:2019
	Canada (CSA) Non-Incendive (*1)	Class I Division 2, Groups A, B, C, D T4 C22.2 No.213-17 CAN/CSA-C22.2 No.61010-1-12 + Amd1-18 CAN/CSA-C22.2 No.61010-2-030:18 CAN/CSA-C22.2 No.61010-2-201:18
	IECEx Ex “ec” (*7)	Ex ec IIC T4 Gc IEC 60079-0 Ed. 7.0 (2017) IEC 60079-7 Ed. 5.1 (2017) IEC 60079-15 Ed.5.0 (2017)
	Emirates Conformity Assessment Scheme (ECAS-Ex) Ex “ec” (*7)	Ex ec IIC T4 Gc IEC 60079-0 Ed. 7.0 (2017) IEC 60079-7 Ed. 5.1 (2017) IEC 60079-15 Ed.5.0 (2017)
Restriction of Hazardous Substances (*5)	RoHS Directive (*12)	EN IEC 63000:2018
	UK RoHS Regulation	EN IEC 63000:2018
	UAE RoHS Directive	UAE Cabinet Decision No. 10 of 2017

*1: For the rack-mountable devices, DIN rail-mountable devices, and wall-mountable devices to meet the Safety Standards and EMC Standards, the devices must be installed in a lockable metal cabinet. The cabinet must conform to IEC/EN/CSA 61010-2-201 or provide degrees of protection IP3X or above and IK09 or above.

*2: For lightning surge immunity, a device such as a lightning arrester needs to be installed externally. Some module can select a pressure clamp terminal block with surge absorber. For details, refer to “Terminal Block” (GS 34P02Q41-01E).

All Rights Reserved. Copyright © 2008, Yokogawa Electric Corporation

*3: When using the NFCP050 or NFLP121, mount ferrite cores as shown below in order to meet the EMC standards.
- NFCP050 (CPU module): Mount two ferrite cores “A1193MN” to Ethernet cable of the NFCP050 side.
- NFLP121 (PROFIBUS-DP Communication module) : Mount one ferrite core “A1193MN” to PROFIBUS-DP cable of the NFLP121 side.

*4: Refer to TI 34P02Q91-01E for the products meeting NI.
*5: For modules conforming to each standards, refer to the section “■ I/O AND RELATED MODULES” and the table “List of FCN-RTU’s Modules and Compliant Standards, Installation Limitations” of this document.
*6: When FCN-RTU is used for regions where theATEX/UKEX applies, the Instruction Manual, “Explosion Protection of FCN/FCJ Products” (IM 34P02Q11-02E) is required for safer installation and wiring.
*7: To be compliant with these standards, the FCN-RTU hardware needs to be installed in a lockable metal cabinet of IP54 or higher protection rating.
*9: A Class A hardware device is designed for use in the industrial environment. Please use this device in the industrial environment only.
*10: This marking is the explosion-proof specification for FCN-RTU. The marking of each module is either “Ex II 3G Ex ec II C T4 Gc X” or “Ex II 3G Ex ec nC II C T4 Gc X”. Symbol ‘X’ denotes the specific condition of use. See “Explosion Protection of FCN/FCJ Products” (IM 34P02Q11-02E) for detail.
*11: To be compliant with these standards, the FCN’s cable which is drawn out from the metal, needs to be used the VW-1 class or more of flame-retardant cable.
*12: Including the confirmation of 10 restricted substances defined in the Commission Delegated Directive(EU) 2015/863 amending Annex II to Directive 2011/65/EU.

“Administration on the Control of Pollution Caused by Electrical and Electronic Products” in the People’s Republic of China.

The Product information required by the law is disclosed in the Yokogawa’s website. Please refer to the following site.

http://www.yokogawa.com/dcs/CNRoHS/

This instrument is intended to be sold and used only as a part of equipment which is excluded from EU WEEE (Waste Electrical and Electronic Equipment) Directive and UK WEEE Regulation, such as large-scale stationary industrial tools, a large-scale fixed installation and so on, and therefore, subjected to the exclusion from the scope of the EU WEEE Directive and the UK WEEE Regulation.

All Rights Reserved. Copyright © 2008, Yokogawa Electric Corporation

■ BASE MODULE

A base module is a chassis on which various function modules such as CPU, power supply, and I/O modules are mounted to configure a control unit.

● Model and Suffix Codes

Base Module (short)

		Description
Model	NFBU050	Base module (short)
Suffix Codes	-S	Standard type
	1	DIN rail-mounted
	5	Basic type with no explosion protection
	6	With ISA Standard G3 option and no explosion protection
	E	Basic type with explosion protection
	F	With ISA Standard G3 option and explosion ptrotection

Base Module (long)

		Description
Model	NFBU200	Base module(long)
Suffix Codes	-S	Standard type
	0	19-inch rack-mounted
	1	DIN rail-mounted
	5	Basic type with no explosion protection
	6	With ISA Standard G3 option and no explosion protection
	E	Basic type with explosion protection
	F	With ISA Standard G3 option and explosion ptrotection

Optional Accessories

		Description
Model	NFDCV01	Dummy cover for I/O module slot
	NFDCV02	Dummy cover for power supply module slot

● Specifications

Item			Specification		
Model			NFBU050-S1□	NFBU200-S0□	NFBU200-S1□
Max number of mountable I/O modules			3	8	8
Number of mountable Power suply modules			1	2 (*1)	2 (*1)
Weight			0.58 kg	1.9 kg	1.0 kg
Dimensions (W×H×D)			283×131×24.2 mm	482×132.5× 40.5 mm	440×131× 42.3 mm
Mounting			DIN rail-mounted	19-inch rack-mounted	DIN rail-mounted
Maximum power consumption	5 V	Self-consumption	0.025 A	0.4 A(max)	
	24 V	Self-consumption	0		

*1: Only NFPW444 power supply module can be redundant.

All Rights Reserved. Copyright © 2008, Yokogawa Electric Corporation

● Dimensions

DIN rail-mounted Model (NFBU050)

Unit: mm

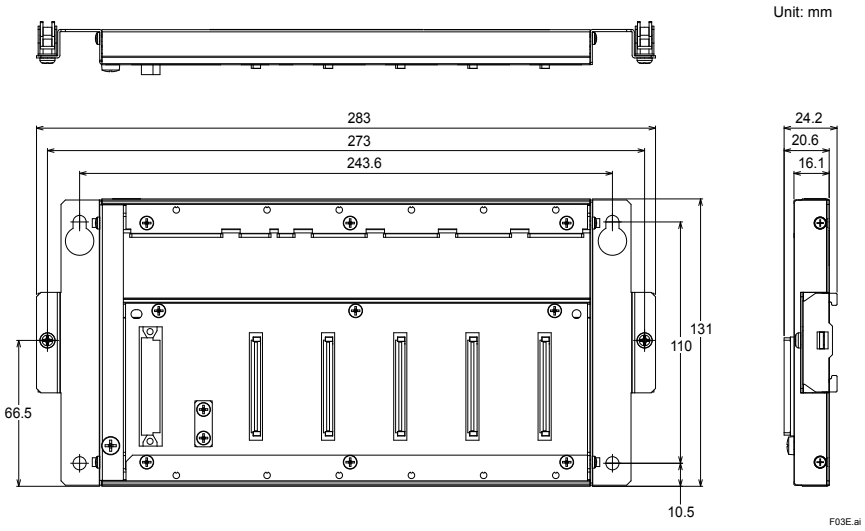

DIN rail-mounted Model (NFBU200)

Unit: mm

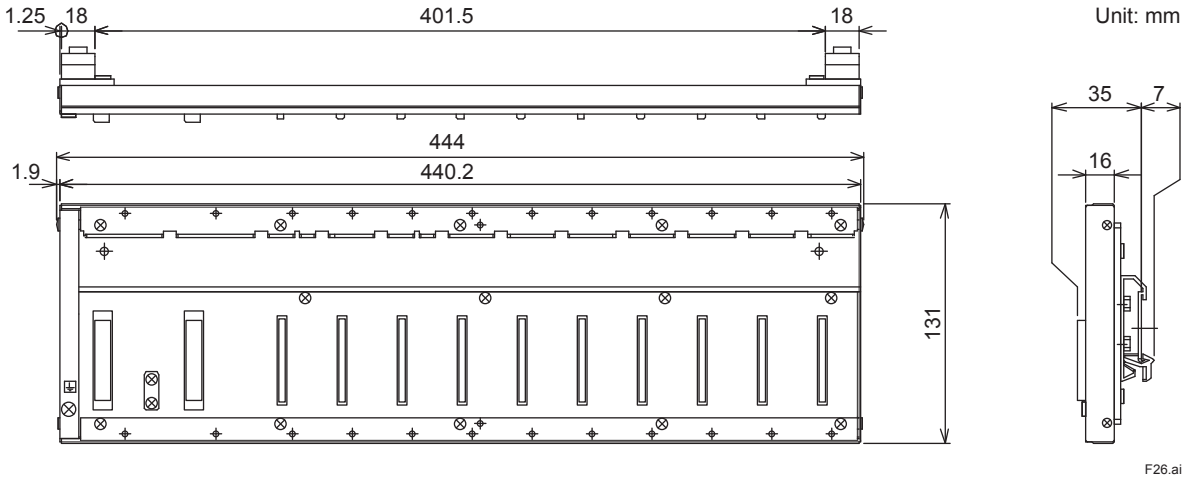

19 inch rack-mounted Model (NFBU200)

Unit: mm

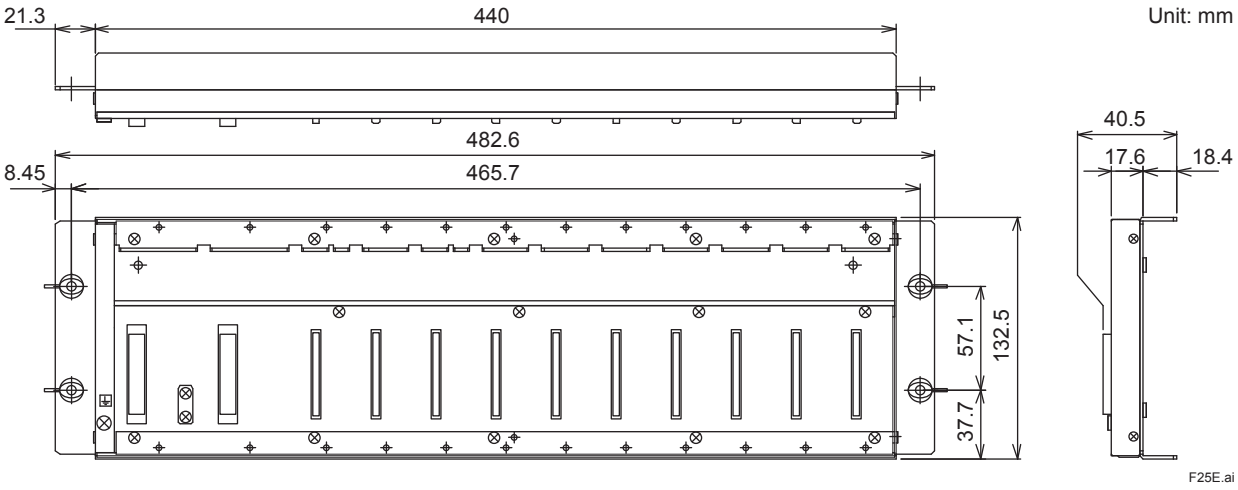

All Rights Reserved. Copyright © 2008, Yokogawa Electric Corporation

■ POWER SUPPLY MODULE (NFPW426, NFPW444)

NFPW426 power supply module mounted on the base module model NFBU050.

NFPW444 power supply module mounted on the base module model NFBU050 and NFBU200.

These power supply module has output functions (5 V DC power supply, 24 V DC analog field power supply for additional I/O modules).

● Model and Suffix Codes

		Description
Model	NFPW426	Power supply module (12 V DC input, 24 V DC input) (*1)
Suffix Codes	-5	Standard type with no explosion protection
	-E	Standard type with explosion protection
	0	Basic type
	1	With ISA Standard G3 option

*1: This power supply module can be mounted only on the base module model NFBU050.

		Description
Model	NFPW444	Power supply module (24 V DC input)
Suffix Codes	-5	Standard type with no explosion protection
	-E	Standard type with explosion protection
	0	Basic type
	1	With ISA Standard G3 option

● Pin Assignment

Power supply terminals (Model NFPW426)

Pin No.	Name	Signal
1	+	24 V DC analog field power supply enable (+) (*1) (*2)
2	-	24 V DC analog field power supply enable (-) (*1) (*2)
3	G (⏚)	Ground of line filter
4	+	Power input
5	-	

*1: To drive analog field power supply function, supply the same voltage at 24 V DC analog field power supply enable (+) and (-) (connect Pin No. 5 to Pin No. 2, and connect Pin No. 4 to Pin No. 1).

*2: When analog I/O modules such as NFAB841 are installed, an analog field power supply is needed.

Power supply terminals (Model NFPW444)

Pin No.	Name	Signal
1	FLD 24V DC +	24 V DC analog field power supply (+) (*1)
2	FLD 24V DC -	24 V DC analog field power supply (-) (*1)
3	G (⏚)	Ground of line filter
4	+	Power input
5	-	

*1: When analog I/O modules such as NFAB841 are installed, an analog field power supply is needed.

Checking terminals

Pin No.	Name	Signal
1	+5 V-CHK	Checking of 5 V system power
2	+24 V-CHK	Checking of 24 V field power supply
3	GND	Signal grounding

● LEDs

LED Indicator	Color	Description
SYS-POWER	Green	Lights when the 5 V system power output is on.
FLD-POWER	Green	Lights when the 24 V field power supply is on.

● Dimensions

Unit: mm

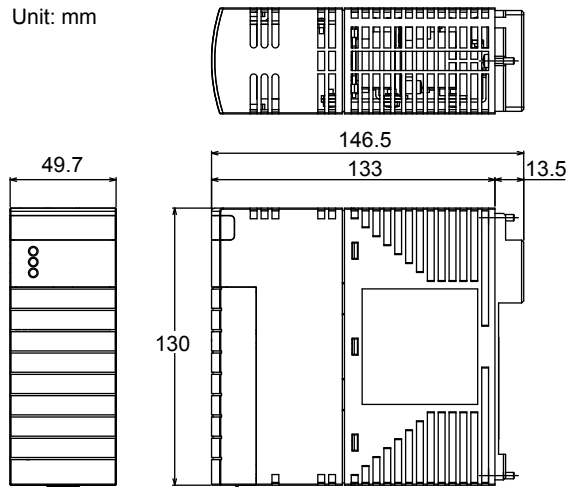

F04E.ai

All Rights Reserved. Copyright © 2008, Yokogawa Electric Corporation

● Specifications

Item			Specification	
Model			NFPW426	NFPW444
Power supply	Input	Rated input voltage	12 V DC, 24 V DC	24 V DC
		Input voltage range	10 to 30 V DC	21.6 to 31.2 V DC
		Input current	Max. 4 A 3.4 A, 12 V DC input 1.7 A, 24 V DC input	Max. 3.3 A
		Fuse rating	6.3 A	6.3 A
		Rush current	Max. 4.3 A for 200 ms, 12 V DC input Max. 9.2 A for 200 ms, 24 V DC input	Max. 20 A
		Withstanding voltage	500 V AC for 1 minute	500 V AC for 1 minute
		Insulation resistance	50 MΩ at 500 V DC	50 MΩ at 500 V DC
		Insensitive momentary power-failure time	2 ms (100%)	2 ms (90%)
	Output	Rated output voltage	+5.1 V DC	+5.1 V DC
		Rated output current	0 to 2.4 A	0 to 7.8 A (*1)
		Peak current	2.52 A	11.8 A
		Total output	12 W	40 W (60W peak)
		Startup time after power-on	Max. 300 ms	Max. 300 ms Max. 100 ms (during a momentary power failure of 200 ms long with the rated input)
		Overvoltage protection	Max. 7 V	Max. 7 V
		Overcurrent protection	Min. 105% (auto recovery)	Min. 105% (Shutdown after 4 to 14 seconds long overcurrent)
Analog field power supply	input	Rated input voltage	-	24 V DC ± 10%
		Input current	-	Max. 4 A
		Fuse rating	-	6.3 A
	output	Rated output voltage	24 V DC	Input voltage minus matching-diode drop
		Rated output current	0 to 0.54 A	4 A (*2)
		Peak current	0.57 A	-
		Total output	13 W	-
		Startup time after power-on	Max. 300 ms	-
		Overvoltage protection	Max. 36 V	Max.35 V
		Overcurrent protection	Min. 105% (auto recovery)	-
Duplex configuration			Impossible	Possible (when installed on base module NFBU200)
Weight			0.61 kg	0.6 kg
Dimensions (W×H×D)			49.7 × 130 × 146.5 mm	49.7 × 130 × 146.5 mm

*1: When ambient temperature is higher than 55°C, the rated output current is limited to 75% (0 to 5.85 A).
*2: When ambient temperature is higher than 55°C, the rated output current is limited to 75% (3 A).

All Rights Reserved. Copyright © 2008, Yokogawa Electric Corporation

■ CPU MODULE (NFCP050)

One CPU module is mounted in control unit. The CPU module runs a real-time operating system, supports programming languages compliant with the IEC 61131-3 international standard, and serves as a Java virtual machine. Especailly, this CPU module has built-in I/Os and built-in software licenses.

● Model and Suffix Codes

		Description
Model	NFCP050	CPU module for FCN-RTU
Suffix Codes	-S	Standard type
	1	Extended type (*1)
	5	Basic type with no explosion protection
	6	With ISA Standard G3 option and no explosion protection
	E	Basic type with explosion protection
	F	With ISA Standard G3 option and explosion protection

*1: For details, refer to “FCN-RTU Low Power Autonomous Controller Functions” (GS 34P02Q02-01E).

● Specifications

CPU

Item		Specification	
Model		NFCP050-S□	
CPU		SH-4A (SH7730) 256 MHz	
Memory	Main	128 MB with ECC	
	Static RAM	1 MB with ECC, backed up by battery	
System		128 MB on-board flash memory	
Serial Port (*1)		3 RS-232 ports (SERIAL: 1, 2, 3), non-isolated, RJ45 modular jacks 1 RS-422/RS-485 port (SERIAL: 4), non-isolated, RJ45 modular jack	
Communication method		RS-232: Full/Half duplex (software settings) RS-422/RS-485: Full/Half duplex (DIP switch settings)	
Synchronization		Asynchronous	
Baud rate		SERIAL: 1, 4	1.2, 2.4, 4.8, 9.6, 14.4, 19.2, 28.8, 38.4, 57.6, or 115.2 kbps
		SERIAL: 2, 3	1.2, 2.4, 4.8, 9.6, 14.4, 19.2, 28.8, or 38.4 kbps
Terminating resistance		RS-422/RS-485: 120 Ω built-in, ON/OFF (DIP switch settings)	
Network Interface		NETWORK	1 Ethernet port, 100/10 Mbps ,100BASE-TX or 10BASE-T, RJ45 modular jack, with Network power switch (ON/OFF)
Built-in I/O (*2)		16 DI channels, 8 DO channels, 12 AI channels (1-5 V), 2 AO channels (4-20 mA, required for external power supply), 2 PI channels, 1 AI channel (0-32 V)	
I/O interface		SB bus (single)	
RAS features		Watchdog timer, temperature monitor, etc.	
Battery (*3)		2700mAH lithium battery	
Display		3 LEDs for CPU status indication, 2 LEDs for LAN status indication, 2 LEDs for Serial port status indication	
Switches		RESET, SHUTDOWN, ON/OFF (NETWORK)	
Power supply	Supply voltage	5 V DC ± 5%	
	Power consumption	1.16 to 2.30 W	
Duplex configuration		Impossible	
Weight		0.57 kg	
Size	Dimensions (W×H×D)	65.8 × 130 × 142.5 mm	
	Occupying slots	2	

*1: For connecting to these serial ports, prepare specially made cables following the table shown below.
*2: MIL 40-pin × 2 (KMS40 cable and TAS40 terminal block can be used.)
*3: With battery exhaustion detection function.

All Rights Reserved. Copyright © 2008, Yokogawa Electric Corporation

Analog Inputs

Item		Specification
Input points		12
Input signals		1 to 5 V differential, non-isolated Allowable common mode voltage range ±1 V DC
Maximum absolute input voltage range		±7.5 V
Input impedance	During power-on	1 MΩ or more
	During power-off	340 kΩ or more
Allowable signal source resistance		500 Ω or less
Accuracy		±0.3% of full scale
Temperature drift		Max. ±0.01%/°C
A/D resolution		15 bits/1-5 V
Data refresh cycle		10 ms
Input step response time		100 ms
Normal mode noise rejection ratio		37 dB or more (with power supply frequency at 50/60 Hz)

Analog Outputs(*1)

Item	Specification
Output points	2
Output signals	4 to 20 mADC, non-isolated
Allowable load resistance	0 to 250 Ω (12 V), 0 to 750 Ω (24V)
Accuracy	±0.5% of full scale
Temperature drift	Max. ±0.01%/ °C
D/A resolution	13 bits/4-20 mA
Data refresh cycle	10 ms
Step response time	100 ms
Output fallback (*2) (*3)	HOLD: Holds the current level when the fallback action is triggered. SETV: Sets the output to the preset level when the fallback action is triggered.
Output ripple	50 mVp-p (250 Ω load)
Output open detection	Provided

*1: To use AO, connect a power supply (12 or 24 V) to Vin and Com terminals.
*2: The fallback detection time is 4 seconds.
*3: Fallback functions can be enabled in common.
When enabling them, HOLD or SETV can be set for each channel.

Digital Inputs

Item	Specification
Input points	16, non-isolated
Rated input voltage	3.3 V DC, voltage-free contact
Input “on” voltage	1.2 V DC or less
Input “off” voltage	2.5 V DC or more
Source current	1 mA
Input response time	25 ms
Function: Status inputs	On/Off status detection Rise/fall

All Rights Reserved. Copyright © 2008, Yokogawa Electric Corporation

Digital Outputs

Item	Specification
Output points	8, non-isolated
Rated load voltage	12 V DC, 24 V DC
Maximum “on” voltage	2 V DC
Maximum output-off leak current	0.1 mA
Output type	Current sink
Maximum load	100 mA/point, 13.2 V 100 mA/point, 26.4 V
Output response time	15 ms
Function: Status outputs	On/Off status outputs
Output fallback (*1) (*2)	HOLD: Holds the current status when the fallback action is triggered. OFF: Resets all the output channels to off when the fallback action is triggered.

*1: The fallback detection time is 4 seconds.
*2: Fallback functions can be enabled in common.
When enabling them, HOLD or OFF can be set in common.

Pulse Inputs

Item	Specification
Input points	2, non-isolated
Input signals	Voltage-free contact pulse, voltage pulse
Absolute maximum input voltage	26.4 V DC
Input frequency	0 to 10 kHz
Minimum input pulse width	40 µs
Input signal level	VH-VL (voltage swing): 3 V or greater where VH: 3 to 24 V VL: Ranges from -1 to 8 V Signal source resistance: 1 kΩ or less
Pull-up resistance	None
Data refresh cycle	10 ms
Filter function	Can select a filter that eliminates chattering (*1).

*1: The maximum input frequency is lower than specified when the filter for eliminating chattering is used.

Analog Input (0 to 32 V DC) (*1)

Item		Specification
Input points		1
Input signals		0 to 32 V differential, non-isolated Allowable common mode voltage range ±1 V DC
Maximum absolute input voltage range		±36 V
Input impedance	During power-on	1 MΩ or more
	During power-off	56 kΩ or more
Allowable signal source resistance		500 Ω or less
Accuracy		±100 mV, ±0.3 % of full scale
Temperature drift		Max. ±6.4 mV/ °C, ±0.02 %/ °C
A/D resolution		15 bits/0-32 V
Input step response time		100 ms
Normal mode noise rejection ratio		25 dB or more (with power supply frequency at 50/60 Hz)

*1: The signal name is BAT+/-.

All Rights Reserved. Copyright © 2008, Yokogawa Electric Corporation

• Appearances

Front View

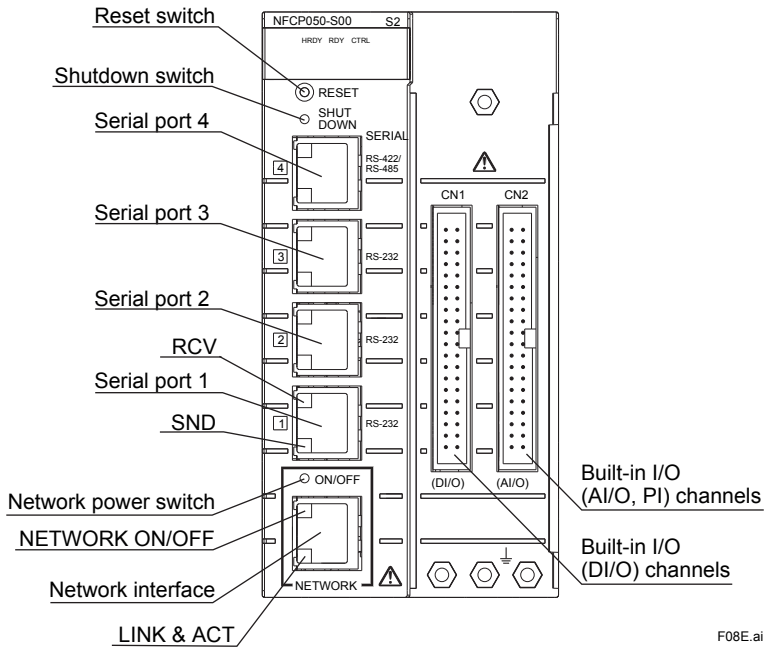

• Pin Assignment

Table Pin Assignment of SERIAL Port (RS-232)

RJ45 Pin No.	RS-232 Signal Name	Conversion to D-sub Connector	
		D-sub 9pin Male (Straight Cable)	D-sub 9pin Female (Crossover Cable)
1	DCD (Data Carrier Detect)	1	1
2	DSR (Data Set Ready)	6	4
3	RXD (Received Data)	2	3
4	RTS (Request To Send)	7	8
5	TXD (Transmitted Data)	3	2
6	CTS (Clear To Send)	8	7
7	DTR (Data Terminal Ready)	4	6
8	GND (Common Ground)	5	5

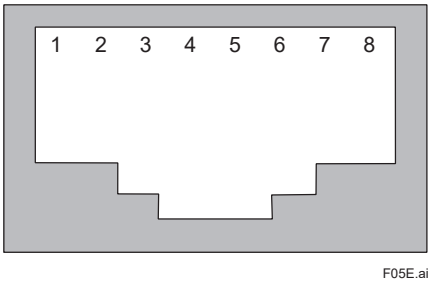

Figure Front View of RJ45 Jack

Table Pin Assignment of SERIAL Port (RS-422/RS-485)

RJ45 Pin No.	Half Duplex (2-wire)	Full Duplex (4-wire)
1	DATA+	TX+
2	DATA-	TX-
3		RX+
4		
5		
6		RX-
7		
8	GND	GND

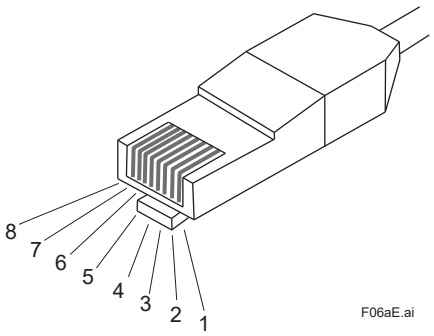

Figure RJ45 Plug

All Rights Reserved. Copyright © 2008, Yokogawa Electric Corporation

CN1 (DI/O)

signal name	Pin No.		signal name
N.C.	40	39	N.C.
DI1	38	37	DO1
DI2	36	35	DO2
DI3	34	33	DO3
DI4	32	31	DO4
DI5	30	29	DO5
DI6	28	27	DO6
DI7	26	25	DO7
DI8	24	23	DO8
DI9	22	21	COM
DI10	20	19	COM
DI11	18	17	COM
DI12	16	15	COM
DI13	14	13	N.C.
DI14	12	11	N.C.
DI15	10	9	N.C.
DI16	8	7	N.C.
COM	6	5	N.C.
COM	4	3	N.C.
N.C.	2	1	N.C.

CN2 (AI/O, PI)

signal name	Pin No.		signal name
BAT+	40	39	BAT-
AI1+	38	37	AI1-
AI2+	36	35	AI2-
AI3+	34	33	AI3-
AI4+	32	31	AI4-
AI5+	30	29	AI5-
AI6+	28	27	AI6-
AI7+	26	25	AI7-
AI8+	24	23	AI8-
AI9+	22	21	AI9-
AI10+	20	19	AI10-
AI11+	18	17	AI11-
AI12+	16	15	AI12-
N.C.	14	13	N.C.
PI1+	12	11	PI1-
PI2+	10	9	PI2-
N.C.	8	7	N.C.
AO1+	6	5	AO1-
AO2+	4	3	AO2-
Vin	2	1	Com

Vin: Power supply (12 or 24 V) input terminal (+) for built-in AO
Com: Power supply (12 or 24 V) input terminal (-) for built-in AO

F09E.ai

Figure Pin Assignment of Built-in I/O (MIL)

All Rights Reserved. Copyright © 2008, Yokogawa Electric Corporation

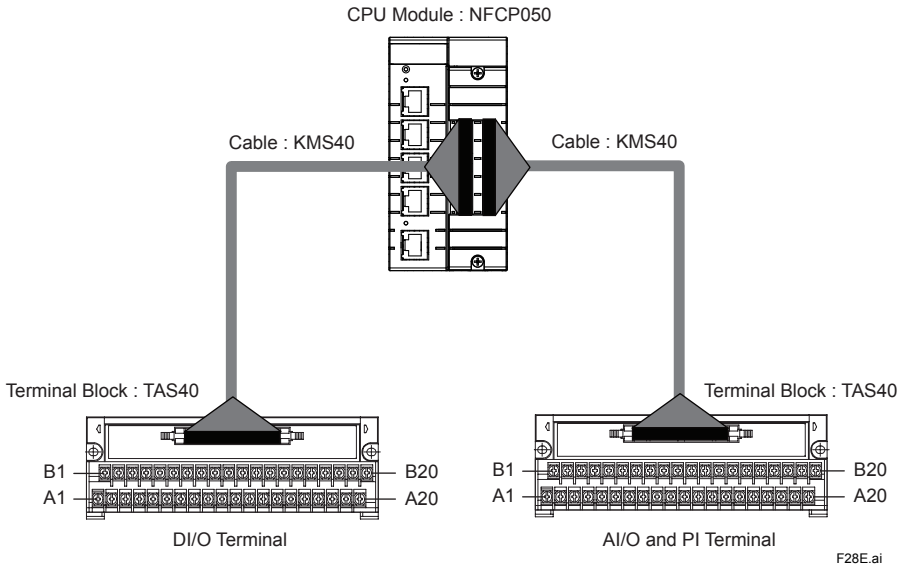

Figure Connection of NFCP050 buit-in I/O and Terminal block TAS40

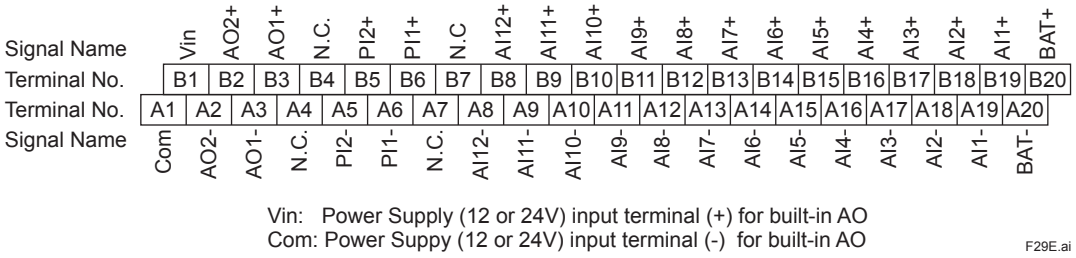

Figure I/O Assignment of TAS40 for NFCP050 built-in AI/O and PI

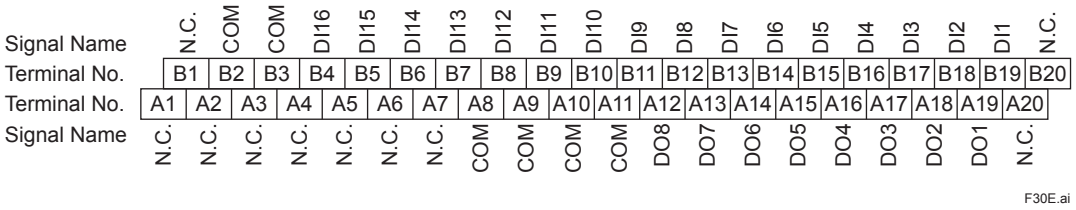

Figure I/O Assignment of TAS40 for NFCP050 built-in DI/O

All Rights Reserved. Copyright © 2008, Yokogawa Electric Corporation

● LEDs

Status Indicators

LED Indicator	Color	Description
HRDY	Green	Lights when the hardware is normal.
RDY	Green	Lights when the system is normal.
CTRL	Green	Lights when the control actions are carried out normally.

LAN status indicators (near RJ45 modular jacks)

LED Indicator	Color	Description
NETWORK ON/OFF	Green	Lights on in the normal communication mode. Lights off in the power down mode.
LINK & ACT	Green	Lights when the LINK has been established. Blinks when the transmission/reception is on.

SERIAL status indicators (near RJ45 modular jacks)

LED Indicator	Color	Description
Receive (RCV)	Green	Reception in progress
Send (SND)	Green	Transmission in progress

● Dimensions

Unit: mm

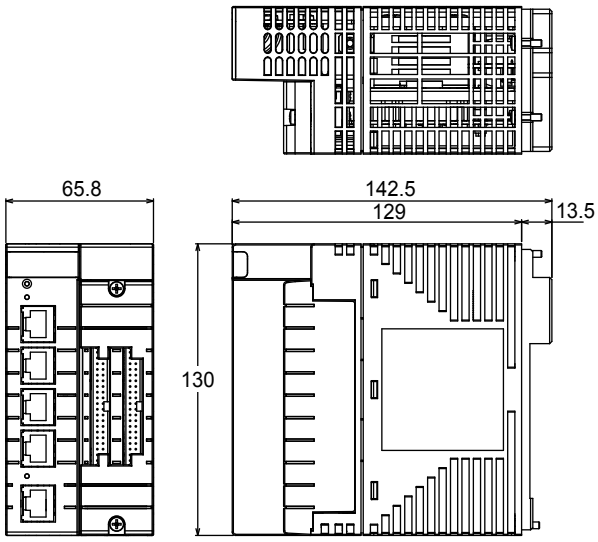

F07E.ai

All Rights Reserved. Copyright © 2008, Yokogawa Electric Corporation

■ I/O AND RELATED MODULES

An autonomous controller FCN-RTU supports the I/O and related modules in following table and up to eight of the I/O modules can be installed on it.

● List of FCN-RTU's Modules and Compliant Standards, Installation Limitations

Table List of FCN-RTU's Modules and Compliant Standards, Installation Limitations (1/3)

Type	Model	Function	Installation Limitations		Safety	EMC	Explosion protection			Hazardous Substances	HART option
			Temperature [°C]	Altitude [m]	CSA CE UKCA EAC C_P	CE UKCA RCM KC EAC C_P	US (FM) NI Canada (CSA) NI	ATEX Ex "ec" UKEX Ex "ec"	IECEx Ex "ec" ECAS-Ex Ex "ec"	RoHS UK RoHS UAE RoHS	
Base module	NFBU050	Base Module (short)	-20 to +70	3000	X	X	X	X	X	X	(*1)
	NFBU200	Base Module (long)	-20 to +70	2000	X	X	X	X	N.A.	X	
Power supply module	NFPW426	Power Supply Module (12 V DC input, 24 V DC input)	-40 to +70	3000	X	X	X	X	X	X	
	NFPW444	Power supply module (24 V DC input)	-20 to +70 (*8)	2000	X	X	X	X	X	X	
CPU module	NFCP050	CPU Module for FCN-RTU	-20 to +70	3000	X	X	X	X	X	X	
Analog I/O Modules (*2)	NFAI135 (*9)	Analog Input Module (4 to 20 mA, 8-channel, Isolated channels)	-20 to +70	2000	X	X	X	X	N.A.	X	X
	NFAI141 (*9)	Analog Input Module (4 to 20 mA, 16-channel, Non-Isolated)	0 to +55		X	X	X (*3)	X	X (*3)	X	X (*3)
	NFAI143 (*9)	Analog Input Module (4 to 20 mA, 16-channel, Isolated)	-20 to +70		X	X	X	X	X	X	X
	NFAI543 (*10)(*11)	Analog Output Module (4 to 20 mA, 16-channel, Isolated)	-20 to +70 (*10)		X	X	X	X	X	X	X
	NFAV141	Analog Input Module (1 to 5 V, 16-channel, Non-Isolated)	0 to +55		X	X	X	X	N.A.	X	N.A.
	NFAV144	Analog Input Module (1 to 5 V, 16-channel, Isolated)	-20 to +70 (*5)		X	X	X	X	N.A.	X	N.A.
	NFAI841 (*9)(*10)	Analog I/O Module (4 to 20 mA input, 4 to 20 mA output, 8-channel input/8-channel output, Non-Isolated)	-20 to +70		X	X	X (*3)	X	X (*3)	X	X (*3)
	NFAB841	Analog I/O Module (1 to 5 V input: differential input, 4 to 20 mA output, 8-channel input/8-channel output, Non-Isolated)	0 to +55		X	X	X	X	N.A.	X	N.A.
	NFAT141	TC/mV Input Module (16-channel, Isolated)	0 to +55		X	X	X	X	N.A.	X	N.A.
	NFAR181	RTD Input Module (12-channel, Isolated)	-	-	X	X	X	X	X	X	N.A.
	-S□0 -S□1	Basic type	0 to +55	2000							
	-S□4 -S□5	With Extended Temperature Range option	-20 to +70 (*4)(*7)	3000 (*4)							
	NFAI835 (*9)(*10)	Analog I/O Module (4 to 20 mA, 4-channel input/4-channel output, Isolated channels)	-20 to +70	2000	X	X	X	X	X	X	X

Note: to be continued

All Rights Reserved. Copyright © 2008, Yokogawa Electric Corporation

Table List of FCN-RTU's Modules and Compliant Standards, Installation Limitations (2/3)

Type	Model	Function	Installation Limitations		Safety	EMC	Explosion protection			Hazardous Substances	HART option
			Temperature [°C]	Altitude [m]	CSA CE UKCA EAC C-Tick	CE UKCA RCM KC EAC C-Tick	US (FM) NI Canada (CSA) NI	ATEX Ex "ec" UKEX Ex "ec"	IECEx Ex "ec" ECAS-Ex Ex "ec"	RoHS UK RoHS UAE RoHS	
Analog I/O Modules (*2)	NFAP135 (*9)	Pulse Input Module (8-channel, Pulse count, 0 to 10 kHz, Isolated channels)	-	-	X	X	X	X	N.A.	X	N.A.
	-S□0 -S□1	Basic type	0 to +55 (*9)	2000							
	-S□4 -S□5	With Extended Temperature Range option	-20 to +70 (*4)(*5)(*6)(*7)	3000 (*4)							
Digital I/O Modules (*2)	NFDV151	Digital Input Module (32-channel, 24 V DC, Isolated)	0 to +70	2000	X	X	X	X	X	X	N.A.
	NFDV551	Digital Output Module (32-channel, 24 V DC, Isolated)	0 to +70		X	X	X	X	X	X	N.A.
	NFDR541 -T□□ (*12)	Relay Output Module (16-channel, 24 to 125 V DC/100 to 240 V AC, Isolated)	0 to +70 (*5)(*6)		X	X	X	X	N.A.	X	N.A.
Communica-tion Modules	NFLC121	CANopen Communication Module (1-port, 10 kbps to 1 Mbps)	0 to +55	2000	X	X	N.A.	N.A.	N.A.	X	N.A.
	NFLF111	FOUNDATION fieldbus Communication Module (4-port)	-	-	X	X	X	X	N.A.	X	N.A.
	-S□0 -S□1	Basic type	0 to +55	2000							
	-S□4 -S□5	With Extended Temperature Range option	-40 to +70 (*4)(*7)	3000 (*4)							
	NFLP121	PROFIBUS-DP Communication Module (1-port, 9.6 kbps to 12 Mbps)	0 to +55	2000	X	X	N.A.	N.A.	N.A.	X	N.A.
Pressure Clamp Terminal Block	NFTA4S	For Analog (16-channel)	-20 to +70	2000	X	X	X	X	X	X	(*1)
	NFTT4S	For Thermocouple/mV (16-channel)	0 to +55		X	X	X	X	N.A.	X	
	NFTR8S	For RTD (12-channel)	-40 to +70	3000	X	X	X	X	X	X	
	NFTB5S	For Digital Input (32-channel)	-20 to +70	2000	X	X	X	X	X	X	
	NFTD5S	For Digital Output (32-channel)	-20 to +70		X	X	X	X	X	X	
	NFTI3S	For Isolated Analog Module (for NFAI135, NFAP135, NFAI835)	-40 to +70	3000	X	X	X	X	X	X	
	NFTC4S -70	Pressure Clamp Terminal Block for Digital (16-chan nel, with dedicated connector, without surge absorber)	-20 to +70	2000	X	X	X	X	N.A.	X	
	NFTF9S	For FOUNDATION fieldbus	-40 to +70	3000	X	X	X	X	N.A.	X	

Note: to be continued

All Rights Reserved. Copyright © 2008, Yokogawa Electric Corporation

Table List of FCN-RTU's Modules and Compliant Standards, Installation Limitations (3/3)

Type	Model	Function	Installation Limitations		Safety	EMC	Explosion protection			Hazardous Substances	HART option
			Temperature [°C]	Altitude [m]	CSA CE UKCA EAC C_P	CE UKCA RCM KC EAC C_P	US (FM) NI Canada (CSA) NI	ATEX Ex "ec" UKEX Ex "ec"	IECEx Ex "ec" ECAS-Ex Ex "ec"	RoHS UK RoHS UAE RoHS	
Terminal Block	TAS40	MIL Connector Terminal Block (40 Pole Plug Types)	-40 to +70	3000	X	X	X	X	X	X	(*1)
	TAS50	MIL Connector Terminal Block (50 Pole Plug Types)	-20 to +70	2000	X	X	X	X	X	X	
Cable	KMS40	MIL Connector Cable (40 Pole Plug Types)	-40 to +70	3000	X	X	X	X	X	X	
	KMS50	MIL Connector Cable (50 Pole Plug Types)	-20 to +70	2000	X	X	X	X	X	X	
Dummy Cover	NFDCV01	Dummy Cover for I/O Module Slot	-20 to +70	2000	X	X	X	X	X	X	
	NFDCV02	Dummy Cover for Power supply Module Slot	-20 to +70		X	X	X	X	X	X	
	NFCCC01	MIL Cable Connector Cover	-20 to +70		X	X	X	X	X	X	

Note: All the modules in this list are available in the temperature range 0 to +55°C.
X: Available (or conforming) N.A.: Not available (or Not applicable)
*1: Unconcerned
*2: To use I/O modules as hazardous location equipment (non-incendive), use the specified pressure-clamp terminal blocks or TAS40/TAS50 (MIL connecter terminal blocks) and KMS40/KMS50 (MIL connector cables).
*3: I/O modules with suffix code "with HART communication" do not conform to the explosion-proof standards.
*4: Refer to "Limitations of Installation for using in the wide temperature range (-40 to +70°C) and high altitude (2000 to 3000m) environments."
*5: When ambient temperature is higher than 55°C, a blank slot on one side is required to NFAV144 and NFDR541 modules. See "Figure Installation Examples of using NFAV144" in the following page.
*6: When ambient temperature is higher than 55°C, available channels of NFDR541 are up to eight.
*7: When ambient temperature is higher than 55°C, NFAR181, NFAP135 and NFLF111 modules cannot be installed in next slot of the NFAI841.
*8: When ambient temperature is higher than 55°C, NFPW444 module is restricted to 75% of rated output current.
*9: In the case of the use of combination with NFPW426, only one module can be used.
*10: NFAI841, NFAI543 and NFAI835 modules are restricted to the external load and module installation. Refer to "Table Module Arrangement and Restrictions on Installation" in the following page.
*11: The combination of NFAI543 and NFPW426 is not allowed. Use NFPW444 module.
*12: Maximum 8 A is allowed per common.

For details, refer to the following General Specifications.

- GS 34P02Q31-01E Analog I/O Modules
- GS 34P02Q35-01E Digital I/O Modules
- GS 34P02Q55-01E FOUNDATION fieldbus Communication Module
- GS 34P02Q57-01E PROFIBUS-DP Communication Module
- GS 34P02Q58-01E CANopen Communication Module

All Rights Reserved. Copyright © 2008, Yokogawa Electric Corporation

● I/O Module Arrangement and Restriction for using ambient temperature is higher than 55°C

Table Module Arrangement and Restrictions on Installation (when ambient temperature is higher than 55°C)

Model	Left-side slot	Right-side slot	Limitations
NFAI841	✓(*1)	✓(*1)	External load (Analog Output): 200-750Ω
	✓	N.A.	
	N.A.	✓	
NFAI543	N.A.	N.A.	External load (Analog Output): 0-400Ω
	N.A.	✓(*1)	Up to 12 channels External load (Analog Output): 0-400Ω,
NFDR541	✓	N.A.	Required a vacant slot on one side Up to 8 channels
	N.A.	✓	
NFAI835	✓	N.A.	External load (Analog Output): 200-750Ω
	✓	✓	External load (Analog Output): 200-500Ω
NFAV144	✓	N.A.	Required a vacant slot on one side
	N.A.	✓	
NFPW444	N.A. or NFPW444	N.A. or NFPW444 or NFCP050	Up to 75% of rated output current

✓: Any module (arbitrary) N.A.: Blank or Not allowed
*1: Except NFAI841

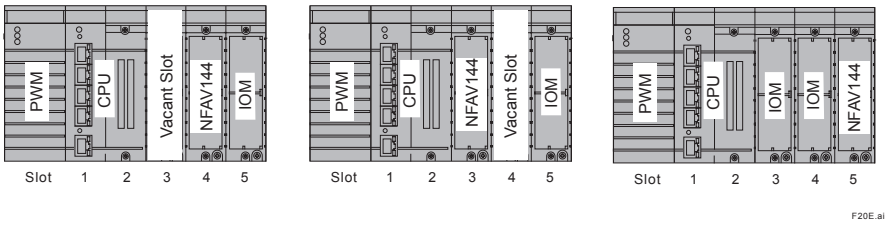

Figure Installation Example of using NFAV144

All Rights Reserved. Copyright © 2008, Yokogawa Electric Corporation

● Limitations of I/O Modules Installation by power supply module (NFPW426,NFPW444)

Ensure that the required power consumption does not exceed the rated power output of the power supply module. For each I/O module's power consumption (5 V DC and 24 V DC), refer to the corresponding General Specifications.

● Installation Requirements for NFAT141 (the combination of Thermocouple input and Pressure clamp terminal)

To keep the accuracy of reference junction compensation (GS 34P02Q31-01E), the pressure clamp terminal should not be affected by radiated heat. Please make sure to meet the following conditions:

- Do not install a heat-radiating unit beneath the NFAT141 installed unit.
- Do not install NFAT141 in the place where airflow affects directly.
- The following modules can be installed next to NFAT141:
  NFAT141, NFAR181, NFAV141 and NFAV144

When installing other I/O modules, make a vacant slot (one or more) in each side.

● Limitations of Installation for using in the wide temperature range (-40 to +70°C) and high altitude (up to 3000m) environments

Main components of FCN-RTU (NFCP050, NFPW426,NFBU050) can operate in the wide temperature range (-40 to +70°C) and high altitude (up to 3000m) environments.

The I/O Modules which are marked up on table "List of FCN-RTU's Modules and Descriptions" can operate in the wide temperature range and high altitude environments by selecting suffix code –S☐4 or –S☐5 (with Extended Temperature range -40 to +70°C option).

In case of using other I/O modules, the specifications of ambient temperature and altitude are shown as follows.

Ambient temperature (operation) : 0 to +55 °C , -20 to +70 °C Altitude: 2000m or lower

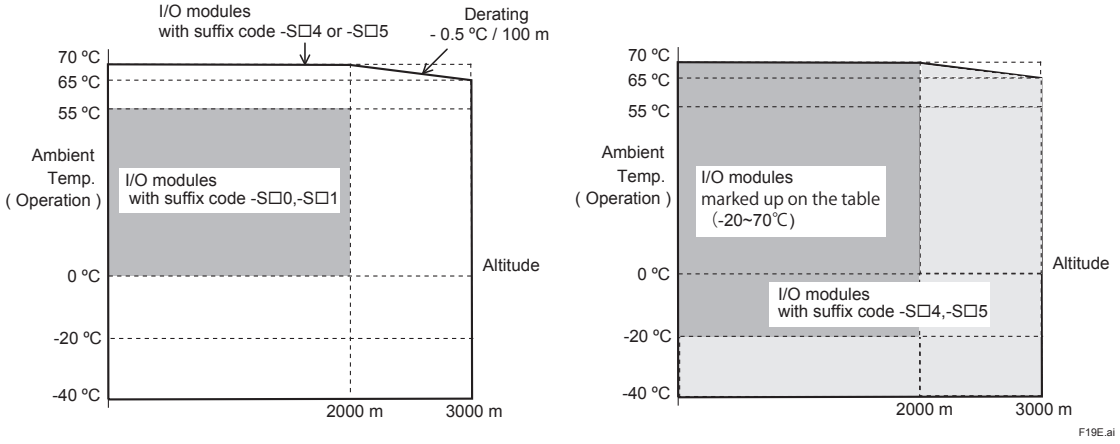

Figure Suffix code vs Ambient Temperature and Altitude of I/O modules

All Rights Reserved. Copyright © 2008, Yokogawa Electric Corporation

- **Pulse Input Module with extend temp. option (NFAP135-S□4, -S□5)'s Ambient Temperature and Limitation of Installations depend on Input Mode**

There are some conditions depending on usinginput mode and ambient temperature.

Table Input Mode, Ambient Temp. (operating) and Installation Requirement of NFAP135-S□4, -S□5

Input Mode (*1)		Ambient Temp. Range (at 2000m)	Range type (*2)	Installation Requirement
Voltage pulse		-40 to +70 °C	1	Ensure space on both side (*3)
		-40 to +55 °C	3	No restriction
Dry contact pulse		-40 to +65 °C	2	Ensure space on both side (*3)
		-40 to +55 °C	3	No restriction
2-wire transmitter current pulse (4 to 20 mA)	with 200 Ω shunt resistance	-40 to +65 °C	2	Ensure space on both side (*3)
		-40 to +55 °C	3	No restriction
	with 500 Ω shunt resistance	-40 to +55 °C	3	Ensure space on one side Or use within 4 points or less
3-wire transmitter voltage pulse		-40 to +65 °C	2	Ensure space on both side (*3)
		-40 to +55 °C	3	No restriction

*1: See Figure Input Modes of NFAP135 shown in next page, and refer to GS 34P02Q31-01E for details
*2: See Figure Ambient Temperature Range of NFAP135-S□4,-S□5
*3: See Figure Installation Examples of using NFAP135

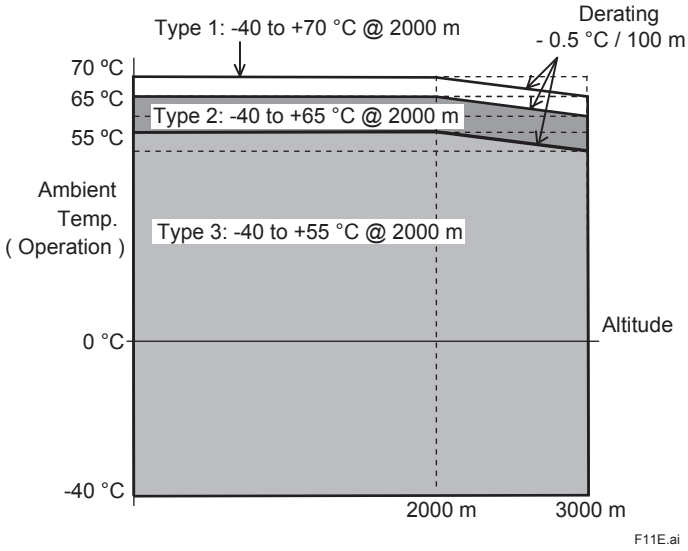

Figure Ambient Temperature Range of NFAP135-S□4, -S□5

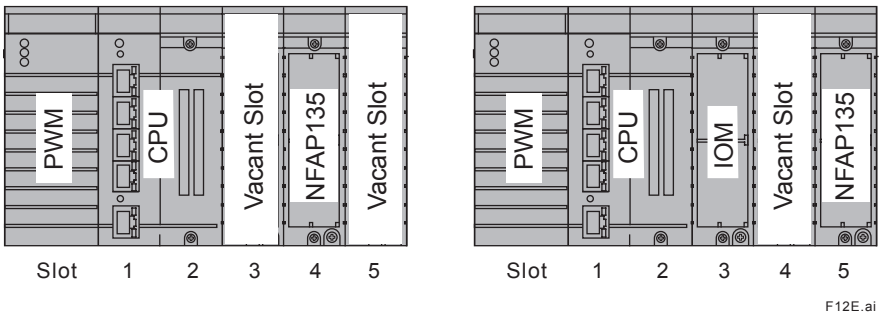

Figure Installation Example of using NFAP135

All Rights Reserved. Copyright © 2008, Yokogawa Electric Corporation

● Pulse Input Module (NFAP135):

Examples of connections and settings depending on the input mode:
(In the following diagrams, SW1 is a switch for enabling/disabling shunt resistance RL, and SW2 is for enabling/disabling chattering elimination filter FIL.)

1. An example of connecting a dry contact pulse (open-collector contact) (*1)

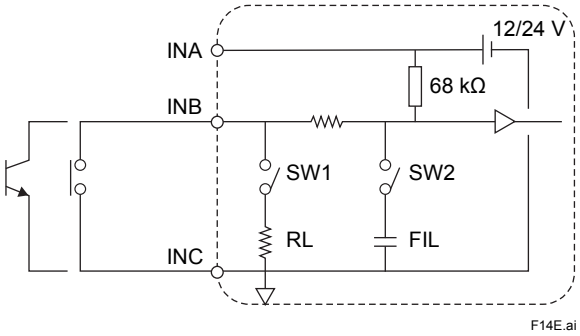

SW1 (RL): OFF
SW2 (FIL): ON when necessary
*1: Pulse input frequency is allowed from 0 to 800 Hz.

2. An example of connecting a dry contact pulse (relay contact)

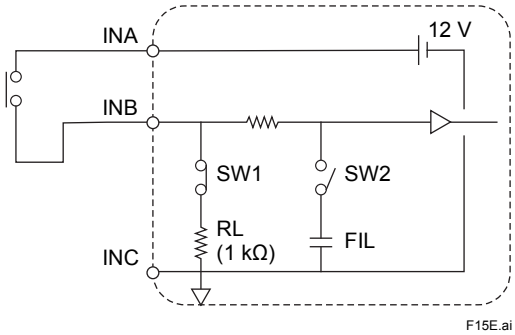

SW1 (RL: 1 kΩ): ON
SW2 (FIL): ON when necessary

3. An example of connecting a voltage pulse

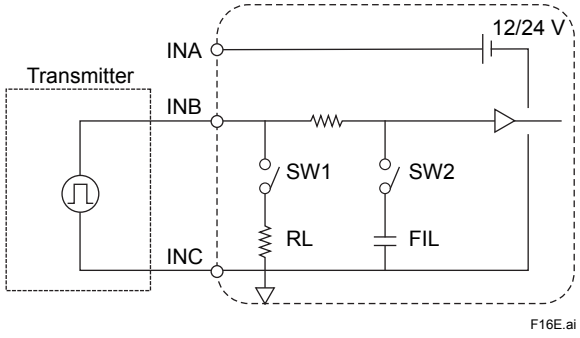

SW1 (RL): OFF
SW2 (FIL): ON when necessary

All Rights Reserved. Copyright © 2008, Yokogawa Electric Corporation

4. An example of connecting a 4-20 mA current pulse from a two-wire transmitter

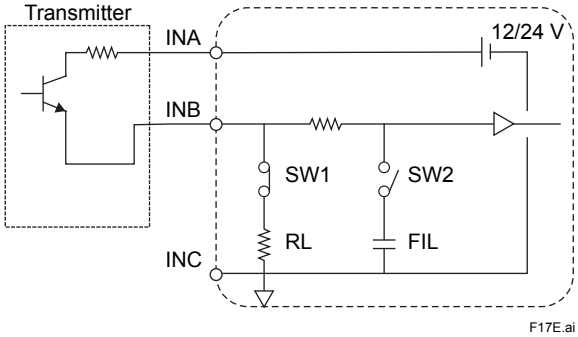

SW1 (RL): Either 200 Ω or 500Ω (*1) to be used
*1: If a 500 Ω shunt resistance is used, note the installation limitations specified.
SW2 (FIL): ON when necessary

5. An example of connecting a voltage pulse from a three-wire transmitter

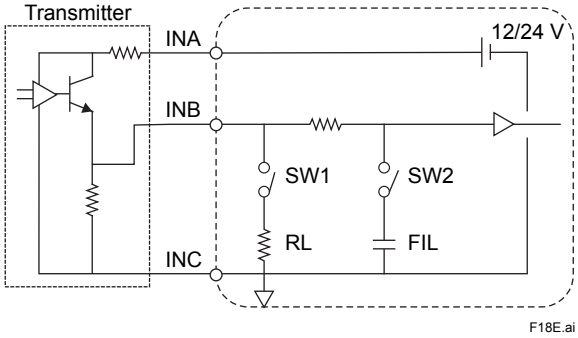

SW1 (RL): OFF
SW2 (FIL): ON when necessary

Figure Input Modes of NFAP135

All Rights Reserved. Copyright © 2008, Yokogawa Electric Corporation

■ CABLE SPECIFICATIONS

The following describes the specifications required for the power and grounding cables used.

For field signal wiring cables of I/O modules, refer to “Field Connections Specifications” (GS 34P02Q30-01E).

● Applicable Cables

Insulated cables for industrial equipment such as:

- 600 V polyvinyl chloride insulated wires (IV); JIS C3307
- Polyvinyl chloride insulated wires for electrical apparatus (KIV); JIS C3316
- 600 V grade heat-resistant polyvinyl chloride insulated wires (HIV); JIS C3317
- Heatproof vinyl insulated wires VW-1 (UL1015/UL1007)
- Control cables (vinyl insulated vinyl sheath cable) (CVV); JIS C3401

● Recommended Sizes

Power cable: AWG20 to 14 (0.5 to 2 mm^2) with ring tongue terminal
Grounding cable: AWG14 to 13 (2 to 2.6 mm^2) with ring tongue terminal

● Recommended Solderless Terminals

Power cable: Insulated M4 solderless terminals, 8.5 mm wide or less
Grounding cable: Insulated M4 solderless terminal, 8.5 mm wide or less

Follow the specifications required by the M4 solderless terminals used.

■ RESTRICTIONS AND PRECAUTIONS ON INSTALLATION

Refer to Installation Guide for “STARDOM FCN/FCJ Installation Guide” (TI 34P02Q91-01E).

● For ATEX/UKEX

When FCN-RTU is used for regions where theATEX/UKEX applies, the Instruction Manual, “Explosion Protection of FCN/FCJ Products” (IM 34P02Q11-02E) below is required for safer installation and wiring.

Document No.	Name
IM 34P02Q11-02E	Explosion Protection of FCN/FCJ Products

● Limitations of Installation for Communication Modules

- NFBU050 base module (short)
  A total of up to two NFLF111/NFLC121/NFLP121 can be installed for FCN-RTU.
- NFBU200 base module (long)
  A total of up to eight NFLF111/NFLC121/NFLP121 can be installed for FCN-RTU.
  And a total of up to four NFLC121/NFLP121 can be installed for FCN-RTU.

■ ORDERING INFORMATION

Specify the model and suffix codes.

For selecting the right products for explosion protection, please refer to “STARDOM FCN/FCJ Installation Guide” (TI 34P02Q91-01E) without fail.

■ TRADEMARK ACKNOWLEDGMENTS

The names of corporations, organizations, products and logos herein are either registered trademarks or trademarks of Yokogawa Electric Corporation and their respective holders.

All Rights Reserved. Copyright © 2008, Yokogawa Electric Corporation
Subject to change without notice.